OUTLINE DRAWING

Unit: inch (mm)

10

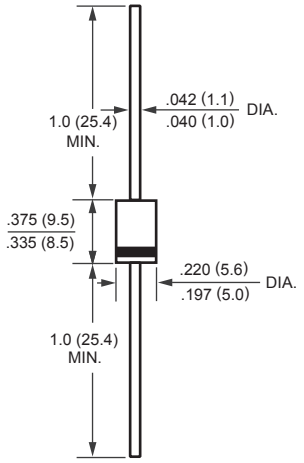

1.5KE

11

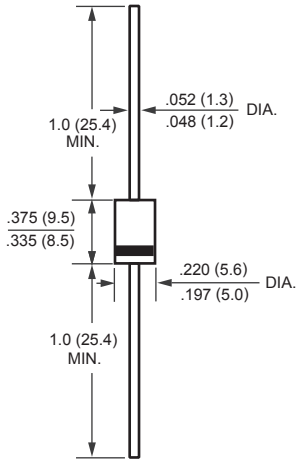

DO-201AD

12

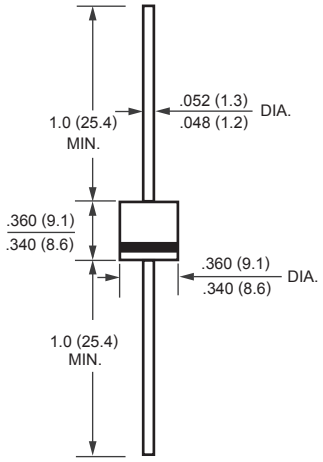

R-6

13

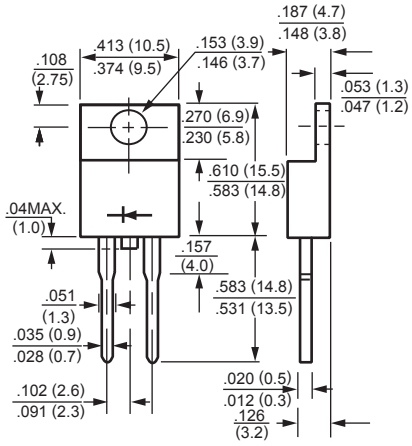

TO-220A

14

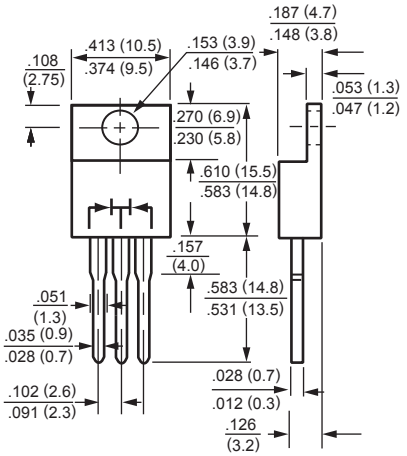

TO-220

15

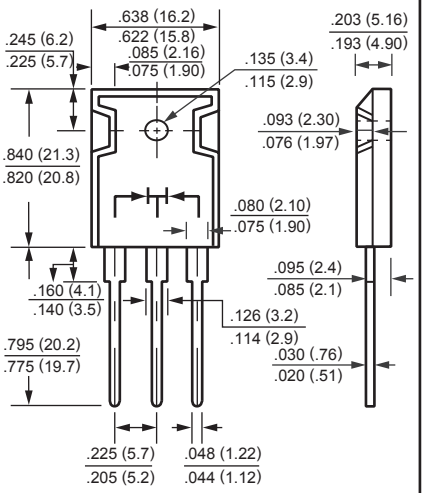

TO247

16

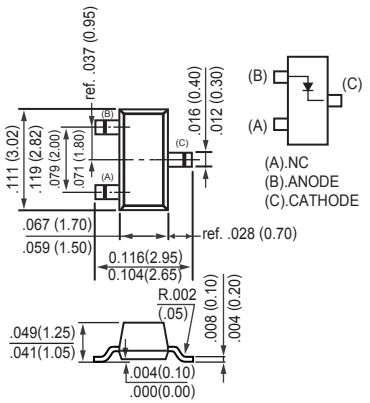

SOT-23-3L

17

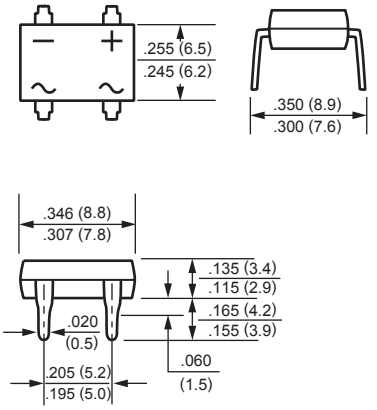

DB-1

18

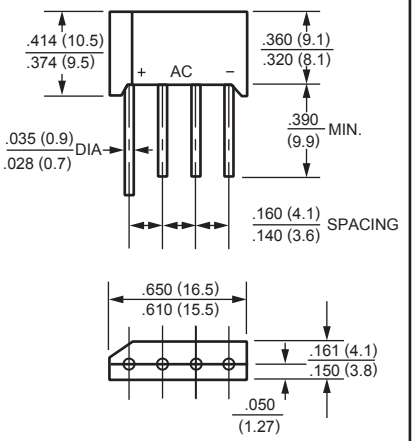

RS-1