SOLDER PADS OUTLINE

Unit: inch (mm)

13

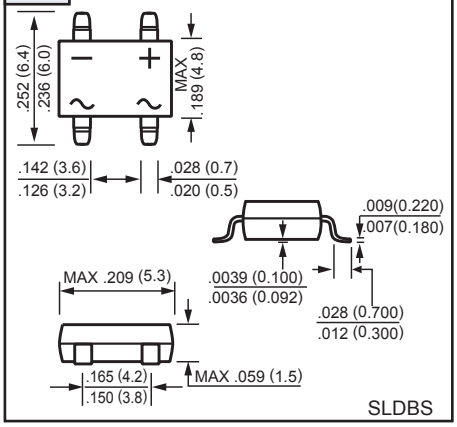

SLDBS

14

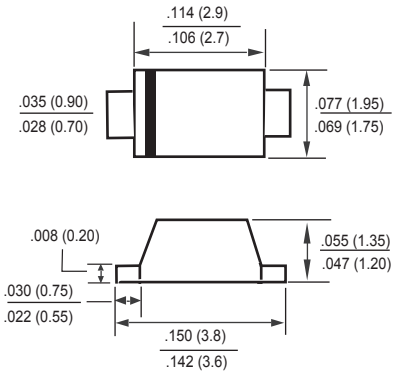

SOD-123F

15

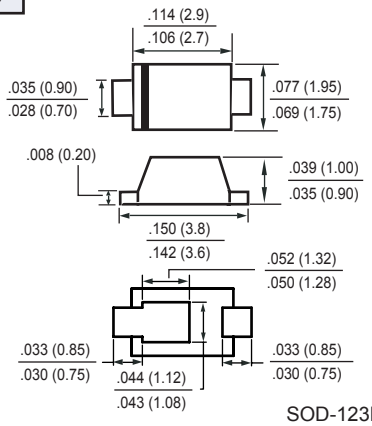

SOD-123FL

16

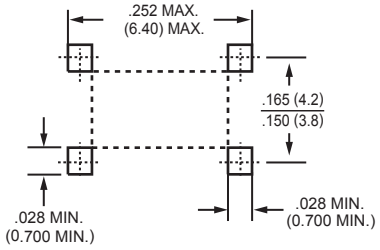

SLDBS

17

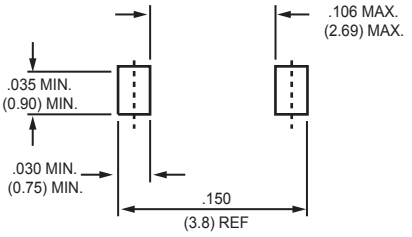

SOD-123F

18

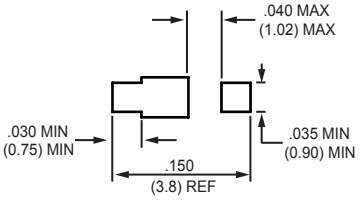

SOD-123FL

19

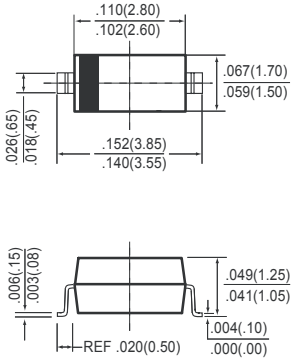

SOD-123

20

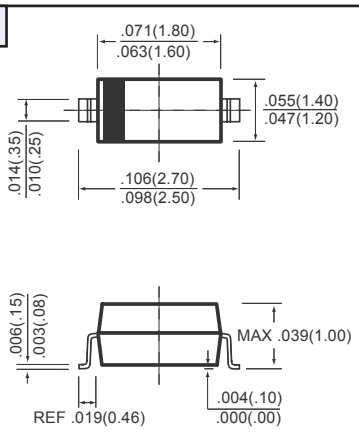

SOD-323

21

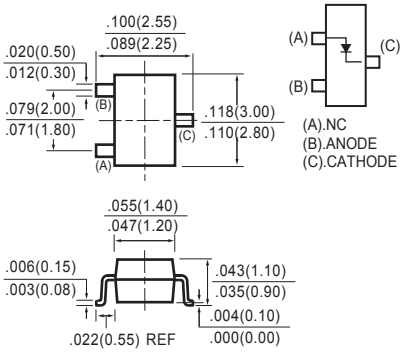

SOT-23

22

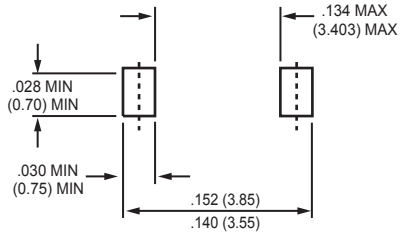

SOD-123

23

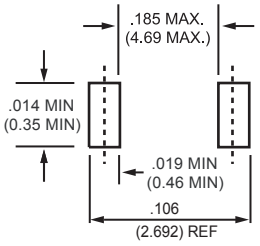

SOD-323

24

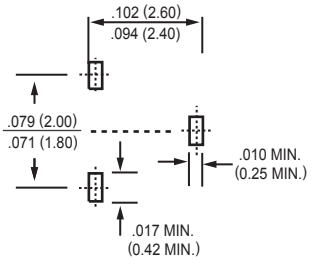

SOT-23

Visit http:// www.rectron.com for complete datasheets